EPSON

Laser Printer

EPSON EPL-5700L

Getting Ready

4011131
C01-00

Where to Find Information

Unpacking Guide

Provides you with information and instructions on how to unpack the printer. Before using the printer, you need to remove all protective materials as described in the instructions contained in this guide.

Getting Ready (this manual)

Provides you with information on assembling the printer's parts and installing printer options.

Reference Guide

Provides you with detailed information on the printer's functions, maintenance, troubleshooting, and technical specifications.

Online Help

Provides you with detailed information and instructions on the printer driver that controls your printer (online help will be automatically installed when you install the printer driver).

EPSON®

Laser Printer

EPL-5700L

All rights reserved. No part of this publication may be reproduced, stored in a retrieval system, or transmitted in any form or by any means, mechanical, photocopying, recording, or otherwise, without the prior written permission of SEIKO EPSON CORPORATION.
No patent liability is assumed with respect to the use of the information contained herein. Neither is any liability assumed for damages resulting from the use of the information contained herein.

Neither SEIKO EPSON CORPORATION nor its affiliates shall be liable to the purchaser of this product or third parties for damages, losses, costs, or expenses incurred by purchaser or third parties as a result of: accident, misuse, or abuse of this product or unauthorized modifications, repairs, or alterations to this product, or (excluding the U.S.) failure to strictly comply with SEIKO EPSON CORPORATION's operating and maintenance instructions.

SEIKO EPSON CORPORATION shall not be liable against any damages or problems arising from the use of any options or any consumable products other than those designated as Original Epson Products or Epson Approved Products by SEIKO EPSON CORPORATION.

General Notice: *Other product names used herein are for identification purposes only and may be trademarks of their respective owners. EPSON disclaims any and all rights in those marks.*

Copyright © 1999 by SEIKO EPSON CORPORATION, Nagano, Japan

Printed on Recycled Paper.

Getting Ready

Declaration of Conformity

According to ISO/IEC Guide 22 and EN 45014

Manufacturer:	SEIKO EPSON CORPORATION
Address:	3-5, Owa 3-chome, Suwa-shi, Nagano-ken 392-8502 Japan
Representative:	EPSON EUROPE B.V.
Address:	Prof. J. H. Bavincklaan 5 1183 AT Amstelveen The Netherlands

Declares that the Product:

Product Name:	Laser Printer
Model:	L270-D

Conforms to the following Directive(s) and Norm(s):

Directive 89/336/EEC:
EN 55022 Class B
EN 50082-1
IEC 801-2
IEC 801-3
IEC 801-4

Directive 73/23/EEC:
EN 60950

October 1999

H. Horiuchi
President of EPSON EUROPE B.V.

Contents

1 Safety Instructions

Laser Printer Precautions 1
Important Safety Instructions 4
Warnings, Cautions, and Notes. 6

2 Finding a Place for the Printer

3 Installing the Options

500-Sheet Lower Cassette Unit 9
Installing 9
Face-up Tray. 10
Installing 11
Memory Module 11
Installing 12
Removing. 16

4 Connecting the Printer

Loading Paper 17
Attaching the Power Cord 19
Connecting to the Computer 20
Parallel interface for PCs 20
Using a USB connection. 21

5 Installing the Printer Software

For Windows Users 22
For parallel interfaces 23
For USB interfaces (Windows 98 pre-installed PCs only) . 25
For Macintosh Users 31
For USB interfaces 31
Making Basic Driver Settings 34
For Windows users 34
Testing the Printer 35
Printing a Status Sheet 35

6 Safety Information

Laser Safety 38
For United Kingdom users. 38
CDRH regulations 39
Laser safety labels 39
Internal laser radiation 40
Ozone safety 41
ENERGY STAR Compliance. 42
For United Kingdom Users 42
Use of options 42
Safety information 42

Index

1 Safety Instructions

Laser Printer Precautions

This printer uses laser technology. The following list of precautions applies whenever you open the printer cover. Even if you are familiar with other types of printers, be sure to follow these precautions carefully to ensure safe, trouble-free operation.

Warning:
Be careful not to touch the fuser, which is marked CAUTION Hot Surface Avoid Contact. If the printer has been in use, the fuser can be very hot.

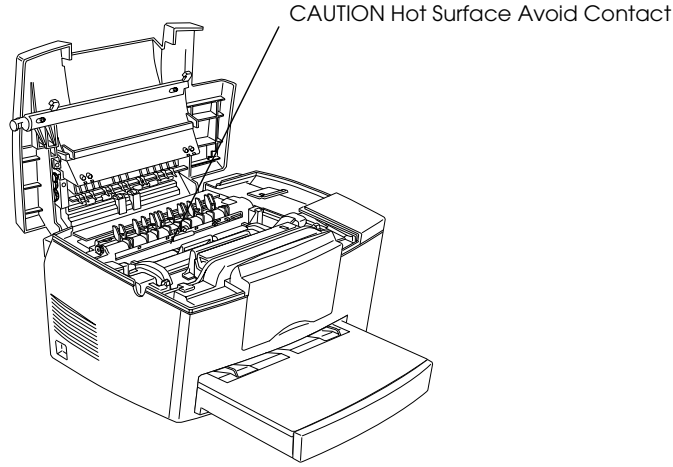

❏ Avoid touching the components inside the printer unless instructed to do so in this guide.

- ❏ Never force the printer's components into place. Although the printer is designed to be sturdy, rough handling can damage it.

- ❏ When removing the developer cartridge, never touch the developing roller under the flap; otherwise, the print quality will decline.

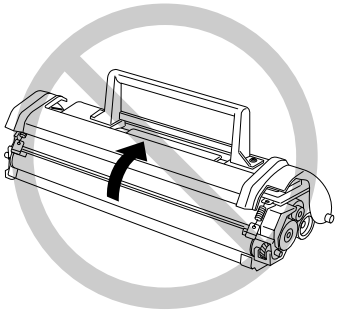

- ❏ Do not turn the cartridge upside down or stand it on its sides.

- ❏ When handling the cartridge, always set it on a clean, smooth surface.

- ❏ Do not attempt to modify or take apart the cartridge. It cannot be refilled.

- ❏ Try not to touch the toner and avoid all contact with your eyes.

- ❏ Do not use a cartridge for at least one hour after moving it from a cool to a warm environment.

- When removing or installing a new photoconductor unit, avoid exposing it to light. The green cylinder, visible through the openings in the unit, is a light-sensitive drum. If the photoconductor unit is out of the printer for a long period, covering it with an opaque cloth prevents extended exposure to light and possible damage. Exposure to light will damage the drum, resulting in dark or light areas on the printed page and may shorten the service life of the unit.

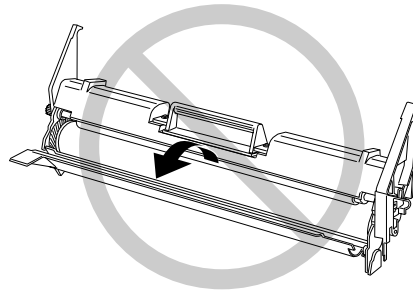

- Be sure not to scratch the surface of the drum. When you remove the photoconductor unit from the printer, always set the unit on a clean, smooth surface. Also, avoid touching the drum, as oils from your skin can permanently damage its surface and may affect print quality.

- To get the best print quality, do not store the photoconductor unit in an area subject to direct sunlight, dust, salty air, or corrosive gasses (such as ammonia). Avoid locations subject to extremes or rapid changes of temperature or humidity. Also, be sure to keep the consumable components out of the reach of children.

Hinweis:
Die Geräteanschlußleitung muß den einshlägigen Normen genügen. Es muß eine dreiadrige Leitung verwendet werden. Die Anshlußleitung darf nicht leichter als H05VV-F order H05VVH2-F sein.

Maschinenlärminformations-Verordnung-3. GSGV, 18. 01. 1991: Der arbeitsplatzbezogene schalldruckpegel beträgt 70 dB (A) oder weniger gemäß ISO 7779.

Important Safety Instructions

Read all of these instructions before operating your printer.

- ❏ Follow all warnings and instructions marked on the printer.
- ❏ Unplug the printer from the electrical outlet before cleaning. Use a damp cloth for cleaning and do not use liquid or aerosol cleaners.
- ❏ Do not use the printer near water.
- ❏ Do not place the printer on an unstable cart, stand, or table.
- ❏ Slots and openings, located on the sides and bottom of the printer, are provided for ventilation. Keep these slots and openings clear to allow proper ventilation. Avoid placing the printer on a bed, sofa or other soft surface, or in a small enclosed area, as this restricts proper ventilation.
- ❏ Connect your printer to the correct power supply. Your printer's power requirements are indicated on a label attached to the printer. If you are not sure of the power supply specifications in your area, contact your local power company or consult your dealer.
- ❏ If you are unable to insert the plug into the outlet, contact an electrician.
- ❏ Do not put your printer where the power cord will be stepped on.

- If you use an extension cord with the printer, make sure the total ampere rating of the devices plugged into the extension cord does not exceed the cord's ampere rating. Also, make sure the total ampere rating of all devices plugged into the wall outlet does not exceed the wall outlet's ampere rating.

- Never push objects of any kind through cabinet slots as they may touch high voltage points or short out parts that could result in fire or electric shock.

- Never spill liquid of any kind on the printer.

- Except as specifically explained in this guide, do not attempt to service this product yourself. Opening or removing covers that are marked "Do Not Remove" may expose you to high voltage or other risks. Refer all servicing in those compartments to a qualified service representative.

- Unplug this printer from the wall outlet and refer servicing to qualified service personnel under the following conditions:

  A. When the power cord or plug is damaged or frayed.

  B. If liquid has been spilled into it.

  C. If it has been exposed to rain or water.

  D. If it does not operate normally when the operating instructions are followed.

  E. If it has been dropped or the cabinet has been damaged.

  F. If it exhibits a distinct change in performance, indicating a need for service.

Note:
Adjust only those controls that are covered by the operating instructions as improper adjustment of other controls may result in damage and may require repairs by a qualified service representative.

Warnings, Cautions, and Notes

Warnings *must be followed carefully to avoid bodily injury.*

Cautions *must be observed to avoid damage to your equipment.*

Notes *contain important information and useful tips on the operation of your printer.*

2 Finding a Place for the Printer

- ❑ Place your printer close enough to the computer or workstation for the printer cable to reach both.

- ❑ Leave adequate room around the printer to allow easy operation, maintenance and sufficient ventilation. The diagram below shows the minimum recommended amount of space.

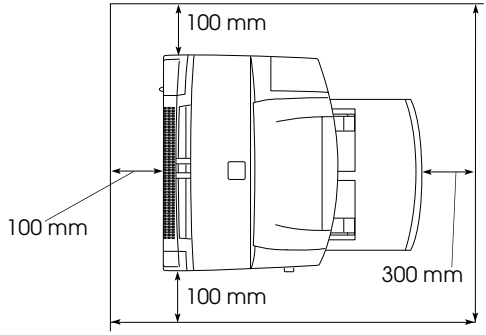

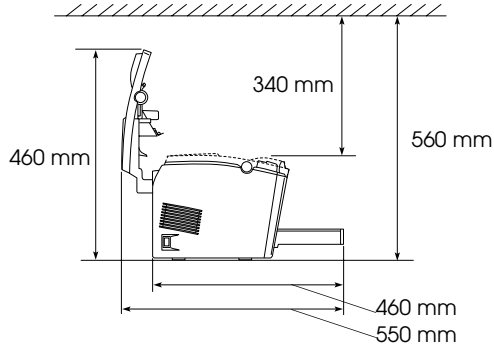

- ❑ If you install the optional 500-Sheet Lower Cassette Unit, you will need an additional 130 mm (5.1 inches) in height. If you install the optional Face-up Tray, you will need an additional 200 mm (7.9 inches) at the back of the printer.

Caution:

- *Never place the printer on a stand that is narrower than the printer's width as shown in the illustration below, as this may damage the printer.*

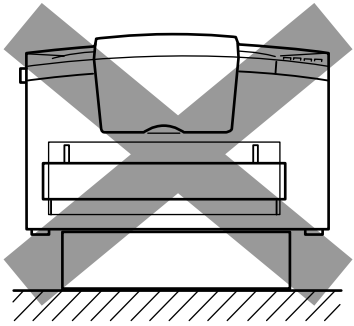

- *Avoid locations that are subject to direct sunlight, extreme temperatures, moisture, or dust.*
- *Place the printer where the power cord can be easily unplugged.*
- *Avoid using an electrical outlet that is controlled by wall switches or automatic timers. Accidental disruption of power may erase valuable information in your computer's or printer's memory.*
- *Avoid using electrical outlets on the same circuit as large motors or other items that might disturb the power supply.*
- *Keep the entire computer and printer system away from potential sources of interference, such as loudspeakers or the base units of cordless telephones.*

Note:
The Imaging Cartridge and the Photoconductor Unit are pre-installed in the printer.

3 Installing the Options

500-Sheet Lower Cassette Unit

The optional 500-Sheet Lower Cassette Unit gives you a second paper source, in addition to the standard paper tray. This section describes how to install the cassette unit and to load paper.

Installing

1. Make sure the printer and cassette are facing the same way. Lift the printer and align the pins on the cassette with the holes on the bottom of the printer. Then, lower the printer until it rests securely on the 500-Sheet Lower Cassette Unit.

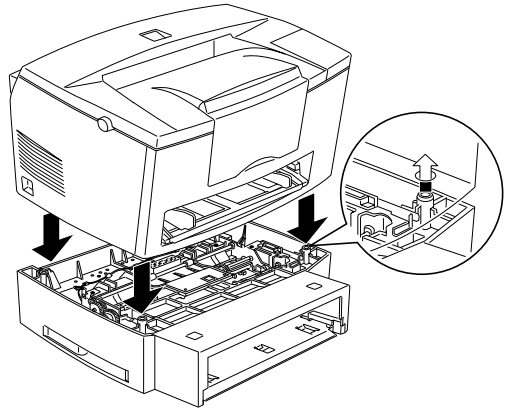

2. Reconnect any interface cables you removed.

3. Make sure the printer's power switch is turned off, then plug the Unit's power cord into the printer. Make sure the power cord is connected correctly.

4. Turn on the printer.

After installing the printer driver, you can confirm the 500-Sheet Lower Cassette Unit is installed correctly. Macintosh users can check the installation in the EPSON Status Monitor 3 and Windows users can check in the Printer Driver by selecting the Optional Settings tab. The cassette unit is indicated as a Paper Source if it is correctly installed. If it is not listed among the paper sources, try reinstalling it. For more information on installing the software, see "Installing the Printer Software" on page 22.

Note:
For detailed instructions on installing or removing the 500-Sheet Lower Cassette Unit, see the Reference Guide.

Be sure to select the paper source in your application program. Since the selection method varies with each application, see your software documentation for more information.

Face-up Tray

The printer normally outputs paper face down on top of the printer. If you want face-up output, you can install the optional Face-up Tray (C81286✻). This tray gives you immediate viewing of your printed output and is recommended for printing on media such as labels and transparencies that require a straight-through paper path.

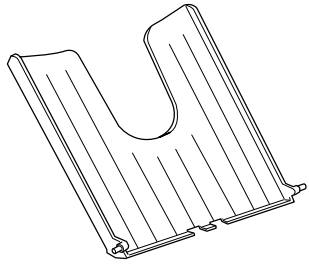

Installing

1. Turn off the printer.

2. Install the Face-up Tray by sliding the mounting pins into the designated slots, one at a time. Do not force both sides in at once.

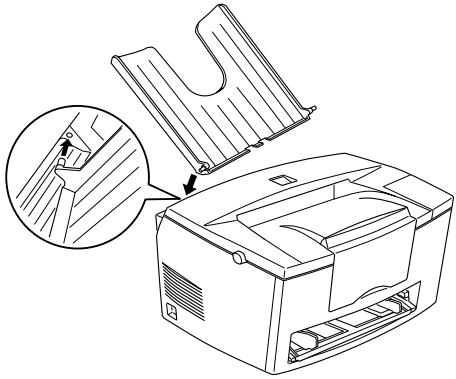

Memory Module

By installing a Single In-line Memory Module (SIMM), you can increase printer memory up to 13 MB (printer default 2 MB + optional 4, 8, 16 or 32 MB). You may want to add additional memory if you are having difficulty printing complex or graphics-intensive pages.

Note:
The maximum amount of memory is 13 MB. Even though a 16 or 32 *MB SIMM is installed, only 13 MB is accessible.*

You can purchase SIMMs from various vendors. Be sure the SIMM you purchase meets the following requirements:

❏ 72-pin, EDO type

❏ Capacity of 4, 8, 16 or 32 MB

- ❑ Access speed of 60 ns or less
- ❑ Dimensions within 108 mm (4.25 inches) × 26 mm (1.02 inches), with a thickness of 10 mm (0.4 inch)

Note:
The maximum amount of memory is 13 MB. Even though a 16 MB or 32 MB SIMM is installed, only 13 MB is accessible.

Installing

Warning:
To avoid electrical shock, do not attempt to install a SIMM unless the printer is turned off.

1. Turn off the printer.
2. Open the printer cover by pressing the latch on the left side of the printer.
3. Remove the printer's side cover by lifting the clip and sliding the side cover backward. Then lift the side cover away from the printer.

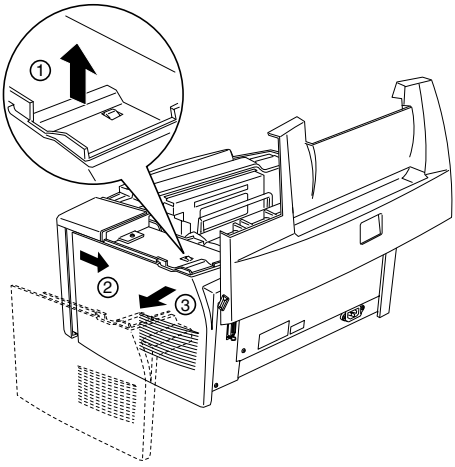

4. Loosen the retaining screws securing the shield cover, and remove the shield cover.

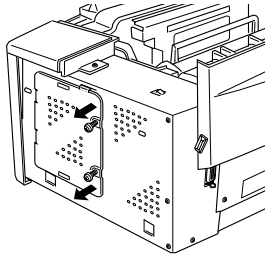

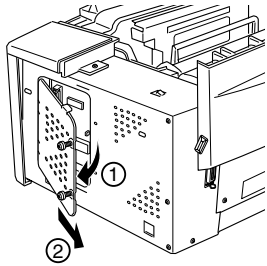

Caution:
Before you install the module, be sure to discharge any static electricity by touching the printer's shield cover. Otherwise, you may damage static-sensitive components.

5. Insert the SIMM module into the RAM slot at an angle, making sure the corner of the SIMM module with the cut-out corner is facing downward. Also confirm that the pin numbers, either 1 or 72, of the slot and the SIMM match.

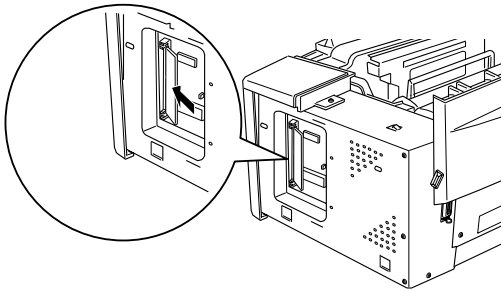

6. Press the module down until it clicks into place at right angles to the slot. Do not apply too much force.

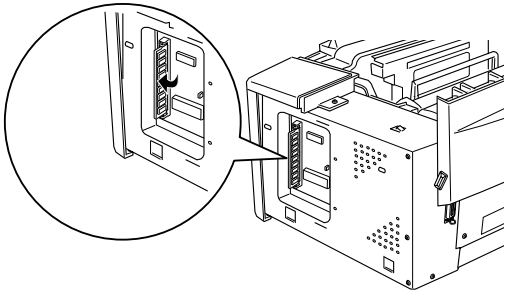

7. Replace the shield cover and tighten its screws.

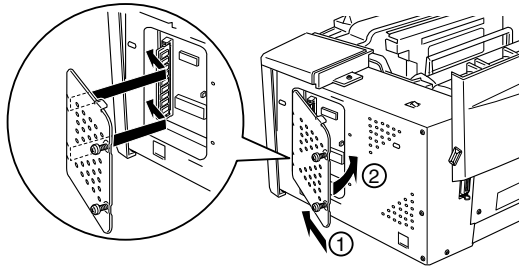

Caution:
When replacing the shield cover, be sure not to pinch wires inside the printer between the printer case and the shield cover.

8. Replace the printer's side cover.

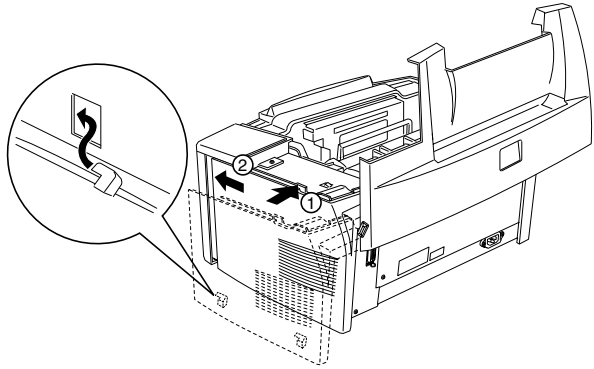

9. Gently close the printer cover.

To verify that memory is correctly installed, print a status sheet. See "Printing a Status Sheet" described later in this guide.

If an incorrect amount of memory is shown on the status sheet, turn off the printer and review the steps above to make sure you correctly installed the SIMM. If the amount of memory is still incorrect, contact your dealer or a qualified service person for assistance.

Removing

1. To access the printer's RAM slots, perform steps 1 through 4 in "Memory Module" on page 11.

2. Pull the clips on each side of the RAM slot outward to release the memory module.

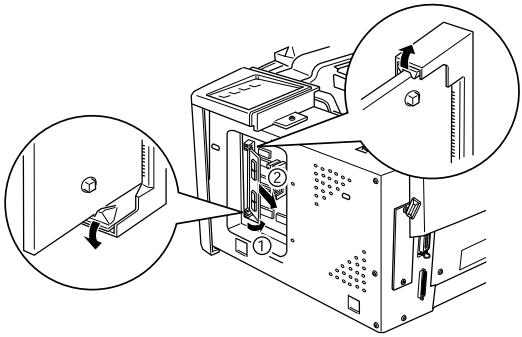

3. Grasp both sides of the SIMM and pull it out.

4. To complete the procedure, follow steps 6 through 9 in "Memory Module" on page 11.

4 Connecting the Printer

Loading Paper

1. Insert the paper tray under the slots at the front of the printer, as shown below, then push it all the way into the printer.

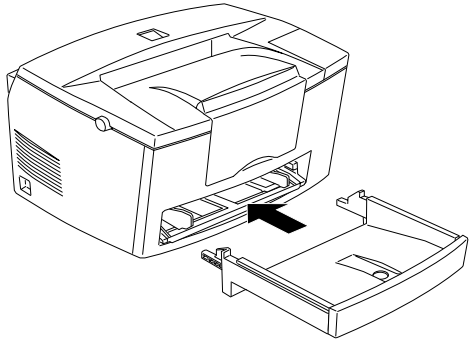

2. Fan a stack of paper (up to 150 sheets), then align the edges by tapping the stack on a flat surface. With the paper's printable side facing up, place the stack into the tray. Slide the paper guides against the paper stack.

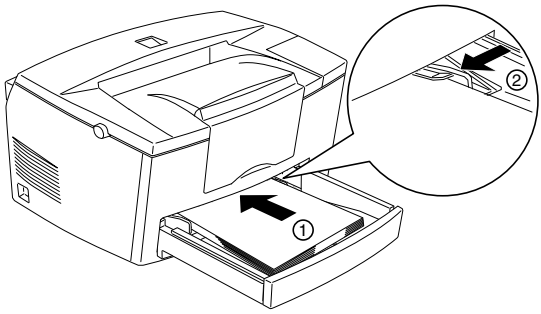

3. Place the cover on the paper tray, as shown below.

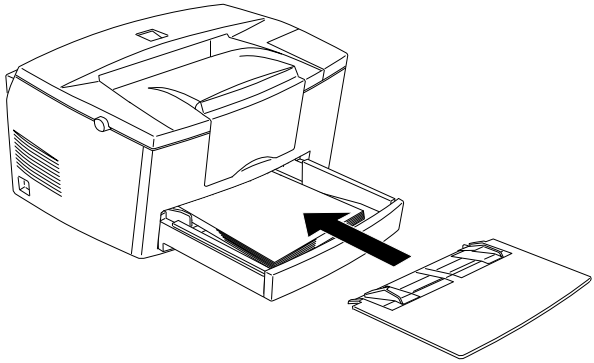

4. Pull up the extension output tray on the front of the printer.

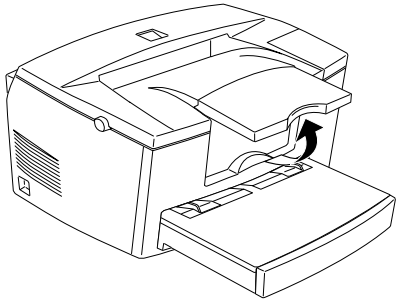

Note:
Before printing make sure the Paper Size setting in your printer driver matches the paper you load.

Attaching the Power Cord

1. Make sure the printer is turned off. It is off when the ○ side of the power switch on the left side of the printer is pushed in.

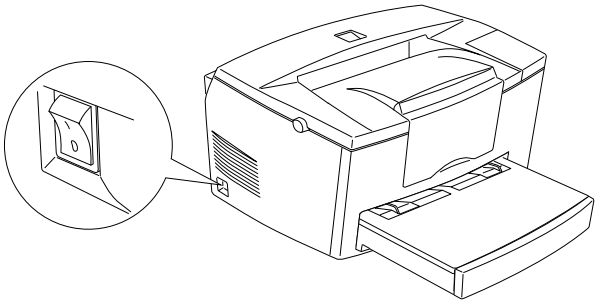

2. Insert the power cord into the back of the printer. Then plug the other end into a properly grounded electrical outlet.

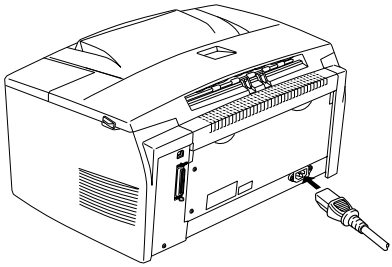

Connecting to the Computer

Your printer comes with two standard interface connectors, parallel and USB.

Parallel interface for PCs

To connect the printer to your PC, you need a shielded, twisted-pair parallel cable.

Note:
Windows 98, 95 and Windows NT 4.0 support the parallel interface.

1. Make sure both the printer and computer are turned off.

2. Plug the cable connector securely into the printer's interface connector. Then squeeze the wire clips together until they lock in place on both sides. If your cable has a ground wire, connect it to the ground connector below the interface connector.

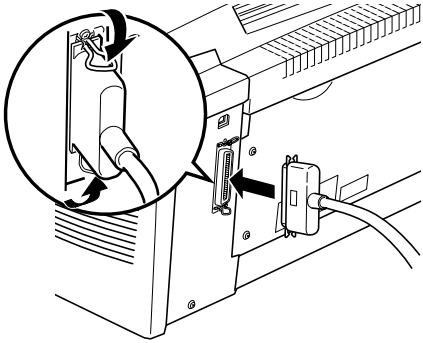

3. Plug the other end of the cable into the computer's parallel interface. If there is a ground wire at the computer end of the cable, connect it to the ground connector at the back of the computer.

Using a USB connection

To connect the printer to a USB port, you need a standard shielded USB cable. Follow these steps.

Note:
Only Macintosh and Windows 98 pre-installed PCs support the USB interface.

1. Make sure both the printer and computer are turned off.

2. Plug the appropriate end of the cable into the USB port on the back of the printer. (The end that fits the printer has a different shape from the end that fits the computer.)

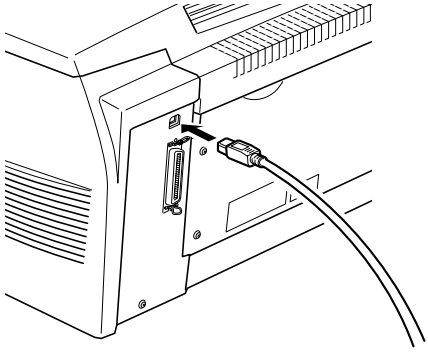

3. Connect the other end of the cable to the computer's USB port.

5 Installing the Printer Software

After connecting the printer to your computer, install the printer software. It is included on the "Printer Software for EPSON EPL-5700L" CD-ROM shipped with your printer.

Your printer software includes:

- ❑ Printer driver
  The printer driver gives you complete control over your printer with the Microsoft Windows 98, 95, Windows NT 4.0, or Macintosh 8.1 or later. With it, you can make settings such as print quality and paper size.

- ❑ EPSON Status Monitor 3 utility
  The EPSON Status Monitor 3 utility allows you to view printer status information such as the amount of toner remaining and check for any printer errors. When the printer driver is installed, the EPSON Status Monitor 3 utility is also installed automatically.

Note:
If you wish to make a floppy disk version of the printer software on your CD-ROM, you can use the driver disk creation utility included on the CD-ROM.

For Windows Users

Your computer must meet the following requirements to use the Windows driver included with the printer:

- ❑ The computer must be running either Microsoft Windows 98/95 or Windows NT 4.0.

- ❑ 10 MB of free hard disk space

For parallel interfaces

Follow these steps to install the printer driver for Windows 98/95 and Windows NT 4.0.

1. Make sure that the printer is off and Windows is running.

2. Insert the CD-ROM that comes with your printer into your CD-ROM drive (this is usually the D: drive).

3. In the dialog box that appears, double-click Install Printer Driver/Utility, or select Install Printer Driver/Utility and then click the top arrow on the right.

If this dialog box does not appear, double-click the My Computer icon, then double-click the CD-ROM drive icon. If this dialog box appears, double-click Install Printer Driver/Utility.

If this dialog box still does not appear, double-click the Setup.exe icon. You may need to use the arrows to scroll through the folder to find it.

4. In the dialog box that appears, select EPSON EPL-5700L Advanced and click OK. This automatically installs the printer driver.

5. When installation is complete, click OK.

Note:

- ❏ *The EPSON Status Monitor 3 utility is also installed.*
- ❏ *Installation time varies depending on your computer system.*

The printer driver is now installed on your computer. The installation program automatically selects this printer as the default printer for Windows applications.

If you installed the options to the printer, you need to make some settings after installing the printer driver. See “Making Basic Driver Settings” on page 34.

Before using the printer software, read the README file located in the Epson (Printers) folder.

For USB interfaces (Windows 98 pre-installed PCs only)

If you connected your printer using the USB interface, you need to install the EPSON USB device driver and the printer driver included in the printer software CD-ROM.

Note:
To connect your printer to the USB interface on your PC, you must purchase a USB cable.

The installation program for the USB device driver allows you to install the printer driver as well. You do not need to install the printer driver separately. Follow the steps in this section to install the software.

Caution:
Make sure you really want to install the USB device driver before beginning the installation process. Do not click Cancel *during installation, as this can create problems with the installed driver.*

1. Turn on your printer.

2. Turn on your computer and make sure Windows 98 is running. The following dialog box appears.

3. Click Next and follow the instructions on the screen.

4. When the following dialog box appears, select Specify a location and type D:\Win98 in the text box (if your CD-ROM drive has a drive letter other than "D", substitute the appropriate letter). Insert the printer software CD-ROM, then click Next.

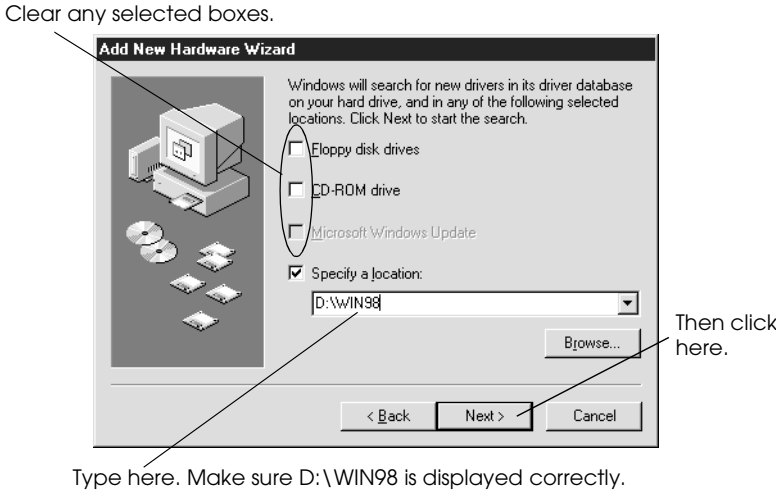

5. Click Next to begin the device driver installation.

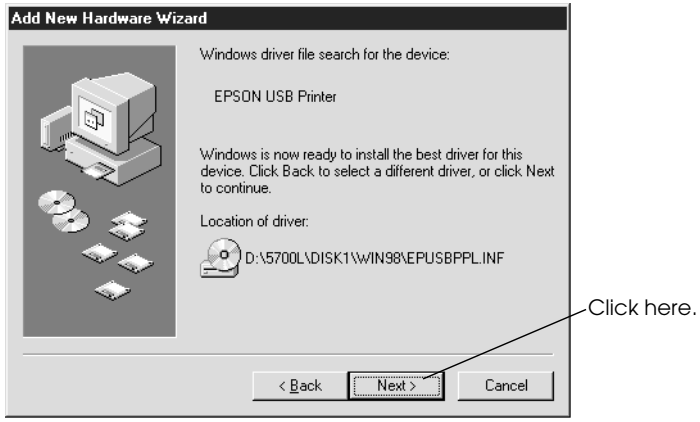

6. After the installation is completed, the following dialog box appears. Click Finish.

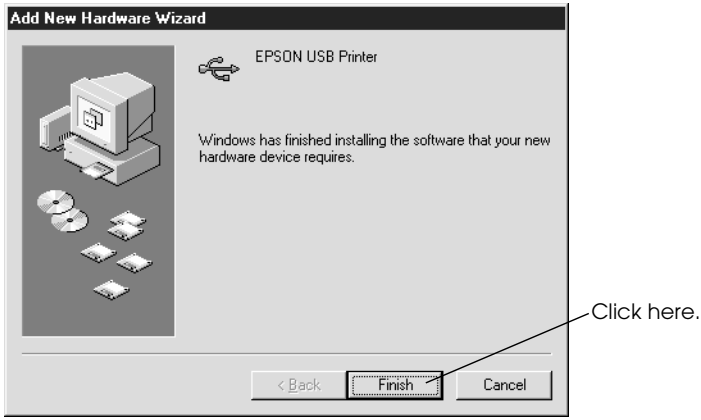

7. The printer software installation automatically starts and the following dialog box appears. Click Next.

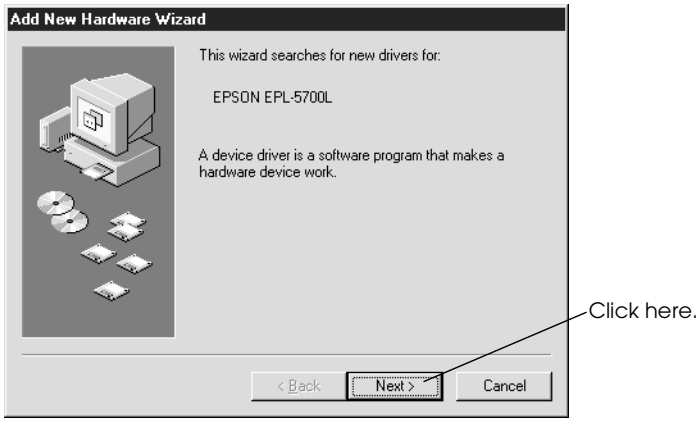

8. When the dialog box below appears, click Next and follow the instructions on the screen.

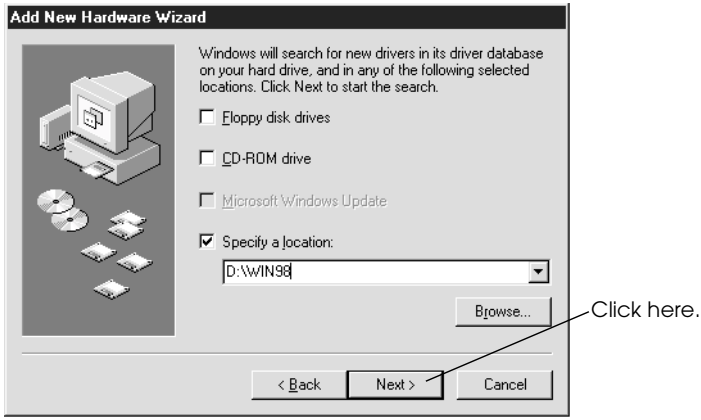

Note:
If the EPSON Installation program appears, click Cancel.

If the Wizard instructs you to restart, you must restart your computer.

Ensuring that the USB Driver was installed correctly

Use the following procedure to confirm that the USB driver was installed correctly.

1. Click the Start button, point to Settings and click on the Printers folder. Make sure the icon for the printer appears in the Printers folder.

2. Click the printer icon, and select Properties from the File menu.

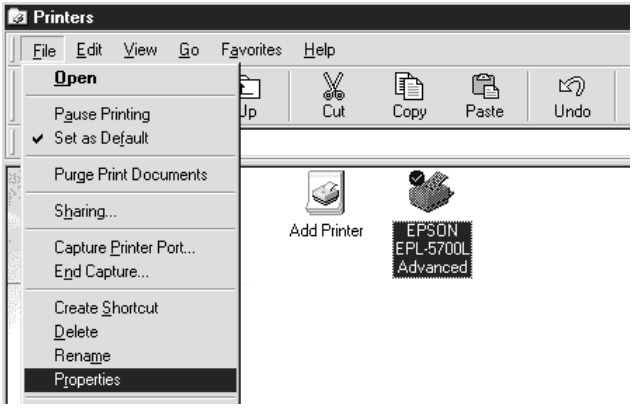

3. Click the Details tab and make sure EPUSBx: (EPL-5700L) is displayed in the Print to the following port list box.

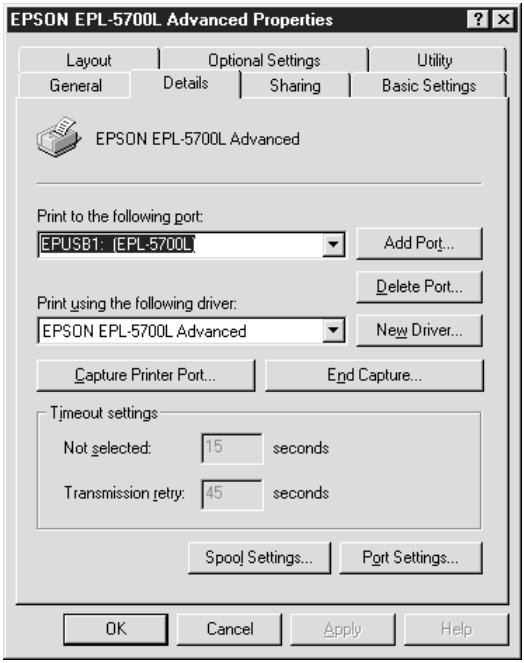

4. If the correct port is not displayed, see “Troubleshooting” in the *Reference Guide*.

For Macintosh Users

Your computer must meet the following requirements to use the Macintosh driver included with the printer:

- ❏ The computer must be running Mac OS 8.1 or later.
- ❏ 6 MB of free hard disk space

For USB interfaces

Caution:
Turn off all virus protection programs before you install your printer software.

Note:
To connect your printer to the USB interface on your Macintosh, you must purchase a USB cable.

Follow these steps to install your printer software.

1. Turn on your Macintosh and insert the software CD in the CD-ROM drive.
2. The EPSON printer software disk opens automatically.
3. If a single Installer icon appears, double-click the icon.

The following dialog box appears.

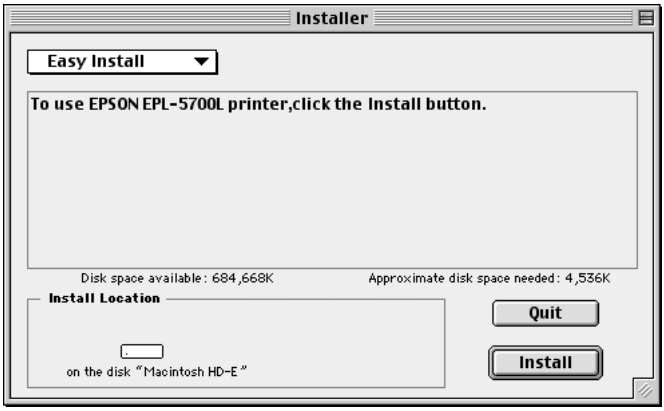

4. To install all of the printer software included on your printer software CD-ROM, make sure the Install Location box displays the correct disk drive and click Install.

5. Click Continue.

6. When a message appears informing you that the installation is finished, click Restart to complete the installation and restart your computer.

Selecting your printer in the Chooser

After you have installed the printer software, you need to open the Chooser to select your printer. You have to choose the printer the first time you use it or whenever you want to switch to another printer. Your Macintosh will always print using the last printer selected.

1. Choose Chooser from the Apple menu. Then click your printer's icon and the port your printer is connected to.

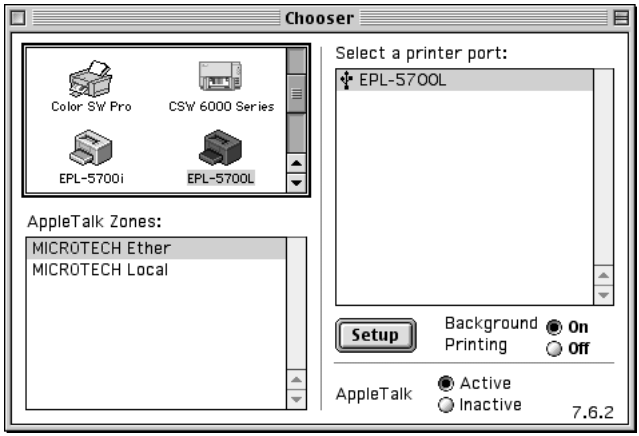

2. Click the Background Printing radio buttons to turn background printing on or off.

   When background printing is on, you can use your Macintosh while it is preparing a document for printing. In order to use the EPSON Monitor 4 utility to manage print jobs, background printing must be turned on.

3. Close the Chooser.

Making Basic Driver Settings

Before you start printing, you should make sure the driver settings match your document requirements. While many Windows applications override the printer settings made with the driver, some do not.

Be sure to check the following:

Paper Size:	The size of the paper loaded in the printer
Orientation:	The direction of printing on the page (portrait or landscape)
Print Quality:	The print resolution in dots per inch (dpi)
Paper Source:	Auto Selection, MP Tray, or 500-Sheet Lower Cassette Unit (if installed)

For Windows users

Follow these steps to make the required settings:

1. Click the Start button.
2. Point to Settings, then click Printers.
3. Right-click your printer icon and choose Properties (in Windows 98/95) or Document Defaults (in Windows NT 4.0).
4. Click the Basic Settings tab.
5. Select the paper size you loaded in the printer from the Paper settings. If you don't see your paper size on the list, use the arrow on the right to scroll through the list.

6. Select Portrait or Landscape orientation. The direction of printing on the diagram on the screen changes according to the orientation you select.

7. Select the resolution from the Print Quality settings.

8. Select the paper source.

Make any other settings you wish, and click OK when you are finished.

Testing the Printer

To test whether the printer is set up correctly, print a status sheet. It contains information about the printer, including the current settings.

Printing a Status Sheet

Follow the steps below to print a status sheet.

For Windows users

1. Make sure A4 size paper is loaded in the printer.

2. Turn on the printer as shown below. It is on when the " | " side of the power switch on the left side of the printer is pushed in.

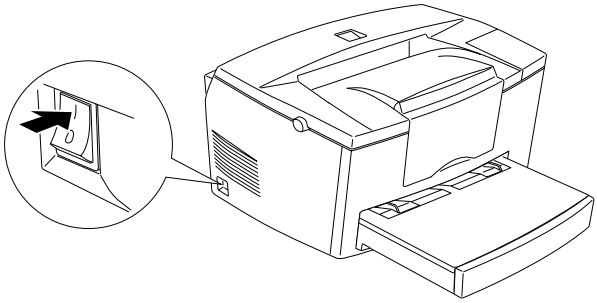

3. Turn on your computer and make sure Windows is running on your computer.

4. Click Start, and select Settings and Printers.

5. Right-click the icon of your printer, and click Properties.

6. Click the Optional Settings tab and select the Status Sheet button. The printer starts printing a status sheet.

7. After the Status Sheet prints, click OK and the dialog box will close.

For Macintosh users

Follow the steps below to print a status sheet.

1. Choose Chooser from the Apple menu. Select your printer then click the Setup button, and the printer setup window will appear. Click your printer's icon and then the port your printer is connected to.

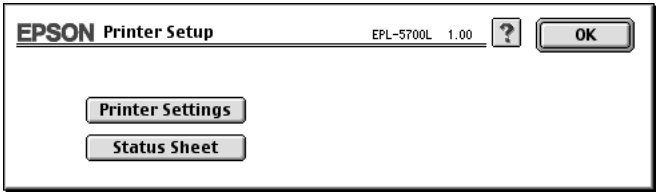

2. Select the Status Sheet button. Then the Status Sheet window appears.

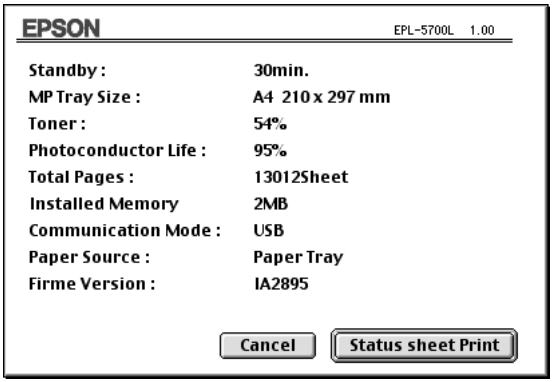

3. Select the Status Sheet Print button, and the printer starts printing a status sheet.

4. After the status sheet prints click OK and the dialog box will close.

6 Safety Information

Laser Safety

This printer is certified as a Class 1 laser product under the U.S. Department of Health and Human Services (DHHS) Radiation Performance Standard according to the Radiation Control for Health and Safety Act of 1968. This means that the printer does not produce hazardous laser radiation.

Since radiation emitted by the laser is completely confined within protective housings and external covers, the laser beam cannot escape from the machine during any phase of user operation.

For United Kingdom users

The EPL-5700L is a page printer which utilizes a semiconductor laser.

There is no possibility of danger from the laser, provided that the printer is operated according to the instructions in the guides provided.

Since radiation emitted by the laser is completely confined within protective housings, the laser beam cannot escape from the machine during any phase of user operation.

Warning:
Use of controls or adjustments or performance of procedures other than those specified in this guide may result in hazardous radiation exposure.

This is a semiconductor laser. The maximum power of the laser diode is 5 mW with a wavelength of 770 to 810 nm.

CDRH regulations

The Center for Devices and Radiological Health (CDRH) of the U.S. Food and Drug Administration implemented regulations for laser products on August 2, 1976. Compliance is mandatory for products marketed in the United States. The label shown below indicates compliance with the CDRH regulations and must be attached to laser products marketed in the United States.

This laser product conforms to the applicable requirement of 21 CFR
Chapter I, subchapter J.

SEIKO EPSON CORP.
Hirooka Office
80 Hirooka, Shiojiri-shi, Nagano-ken, Japan

MANUFACTURED:

Laser safety labels

Warning:
Use of controls, adjustments, or performance of procedures other than those specified in this guide may result in hazardous radiation exposure.

Your printer is a Class 1 laser product as defined in IEC 825 specifications. The label shown below is attached in countries where required.

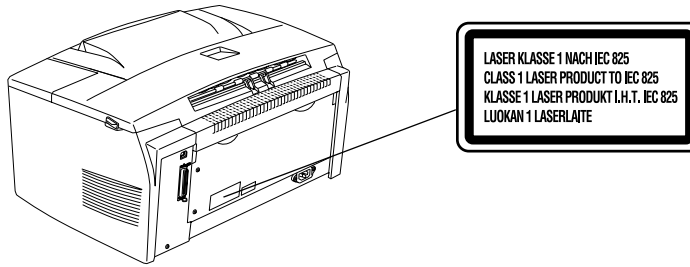

Internal laser radiation

Maximum Radiation Power:	0.73 mW at laser aperture of the print head unit
Wavelength:	770 to 810 nm

This product employs a Class IIIb Laser Diode. The Laser Diode and Scanning Polygon Mirror are incorporated in the print head unit. The print head unit is NOT A FIELD SERVICE ITEM. The print head unit should not be opened under any circumstance.

For Denmark, Finland, Sweden, and Norway users

An additional laser warning label is affixed to the inside of the printer, as shown below.

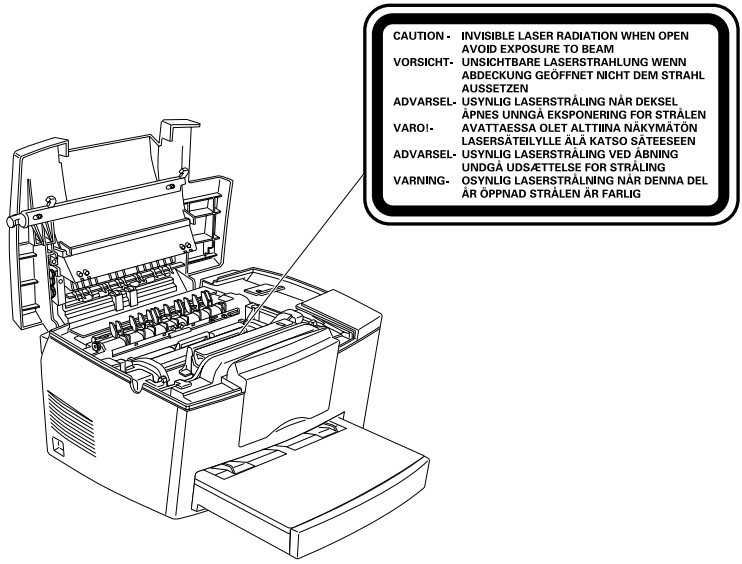

Ozone safety

Ozone emission

Ozone gas is generated by laser printers as a by-product of the printing process. Ozone is produced only when the printer is printing.

Ozone exposure limit

The recommended exposure limit for ozone is 0.1 parts per million (ppm) expressed as an average time-weighted concentration over an eight (8) hour period.

The EPL-5700L laser printer generates less than 0.01ppm for eight hours of continuous printing when considering a closed room of approximately 1000 cubic feet (8′ × 10′ × 12′).

Minimize the risk

To minimize the risk of exposure to ozone, you should avoid the following conditions:

- ❏ Use of multiple laser printers in a confined area (see above)
- ❏ Operation in conditions of extremely low humidity
- ❏ Poor room ventilation
- ❏ Continuous printing for a long period combined with any of the above

Printer location

The printer should be located so that the exhaust gases and heat generated are:

- ❏ Not blown directly into the user's face
- ❏ Vented directly out of the building whenever possible

ENERGY STAR Compliance

As an International ENERGY STAR Partner, EPSON has determined that this product meets the International ENERGY STAR Program guidelines for energy efficiency.

The International ENERGY STAR Program promotes the voluntary development of energy-efficient computers, printers, and other peripheral equipment.

For United Kingdom Users

Use of options

Epson (UK) Limited shall not be liable against any damages or problems arising from the use of any options or consumable products other than those designated as original EPSON products or EPSON approved products by Epson (UK) Limited.

Safety information

Warning: *This appliance must be earthed. Refer to rating plate for voltage and check that the appliance voltage corresponds to the supply voltage.*

Important: *The wires in the mains lead fitted to this appliance are coloured in accordance with the following code:*

Green and yellow—Earth
Blue—Neutral
Brown—Live

If you need to fit a plug:
As the colours of the mains lead of this appliance may not match any coloured markings used to identify the terminals in a plug, please proceed as follows:

- ❑ The green and yellow wire must be connected to the terminal in the plug which is marked with the letter E or the Earth symbol (⏚).
- ❑ The blue wire must be connected to the terminal in the plug marked with the letter N.
- ❑ The brown wire must be connected to the terminal in the plug marked with the letter L.

If damage occurs to the plug, replace the cord set or consult a qualified electrician.

Replace fuses only with a fuse of the correct size and rating.

Index

A

Attaching the power cord, 19

B

Basic driver settings, 34

C

CDRH regulations, 39
Connecting the printer, 17
Connecting to the computer, 20

E

ENERGY STAR, 42
EPSON Status Monitor 3, 22

F

Face-up Tray, 10

I

Installing
- 500-Sheet Lower Cassette Unit, 9
- EPSON Status Monitor 3, 22
- Face-up Tray, 11
- memory module, 12
- printer driver, 22
- printer software, 22

Internal laser radiation, 40

L

Laser printer precautions, 1
Laser safety, 38
Laser safety labels, 39
Loading paper, 17

M

Memory module, 11

O

Options
- 500-Sheet Lower Cassette Unit, 9
- Face-up Tray, 10
- memory module, 11

Ozone safety, 41

P

Parallel interface, 20, 23
Power switch, 19
Printer driver, 22
Printer software
- for Macintosh users, 31
- for Windows users, 22

S

Safety information, 38
Safety instructions, 1, 4
Status sheet, 35

T

Testing the printer, 35

U

USB interface, 21, 25

EPSON OVERSEAS MARKETING LOCATIONS

EPSON AMERICA, INC.
20770 Madrona Ave.
P.O. Box 2842
Torrance, CA 90509-2842
Phone: (800) 922-8911
Fax: (310) 782-5220

EPSON UK LTD.
Campus 100, Maylands Avenue,
Hemel Hempstead, Herts,
HP2 7TJ, U.K.
Phone: (+44) 01442 261144
Fax: (+44) 01442 227227

EPSON DEUTSCHLAND GmbH
Zülpicher Straße 6,
40549 Düsseldorf Germany
Phone: (0211) 56030
Fax: (0211) 5047787

EPSON FRANCE S.A.
68 bis, rue Marjolin
92300, Levallois-Perret, France
Phone: 33.1.40.87.37.37
Telex: 610657

EPSON AUSTRALIA PTY. LTD.
70 GIBBES STREET, CHATSWOOD 2067 NSW.
Phone: 2-9903-9000
Fax: 2-9903-9177

EPSON SINGAPORE PTE. LTD.
No. 1 Temasek Avenue #36-00
Millenia Tower, Singapore 039192
Phone: (065) 33 77 911
Fax: (065) 33 41 185

EPSON HONG KONG LTD.
Rooms 4706-10, 47/F,
China Resources Bldg.,
26 Harbour Road, Wanchai, Hong Kong
Phone: 2585-4300
Fax: 2827-7083

EPSON TAIWAN TECHNOLOGY & TRADING LTD.
10F, No. 287 Nanking E. Road, Sec. 3,
Taipei, Taiwan, R.O.C.
Phone: (02) 717-7360
Fax: (02) 712-9164

EPSON ITALIA S.p.A.
V.le F.lli Casiraghi 427
20099 Sesto S.Giovanni
MI, Italy
Phone: 2-262331
Fax: 2-2440750

EPSON IBERICA S.A.
Av. de Roma, 18-26
08290 Cerdanyola del Valles
Barcelona, Spain
Phone: 582. 15.00
Fax: 582. 15.55

SEIKO EPSON CORPORATION (Hirooka Office)
80 Harashinden, Hirooka
Shiojiri-shi, Nagano-ken
399-0785 Japan

EPSON PORTUGAL, S.A.
R. do Progresso, 471, 1° Perafita
4460 Matosinhos, Portugal
Phone: (02) 996 14 02
Fax: (02) 996 14 11

1998 February

EPSON

Laser Printer

EPSON EPL-5700L

Getting Ready

Printed in Japan
98.09-3.6